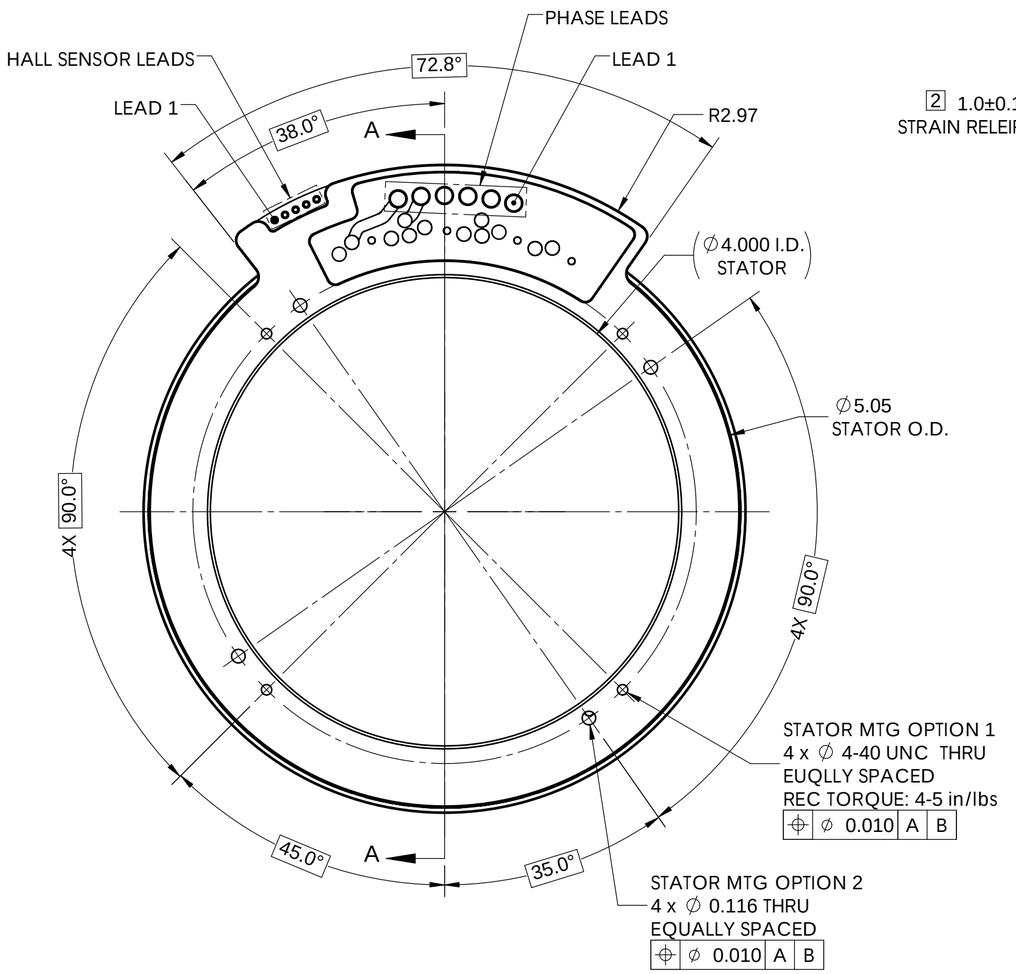

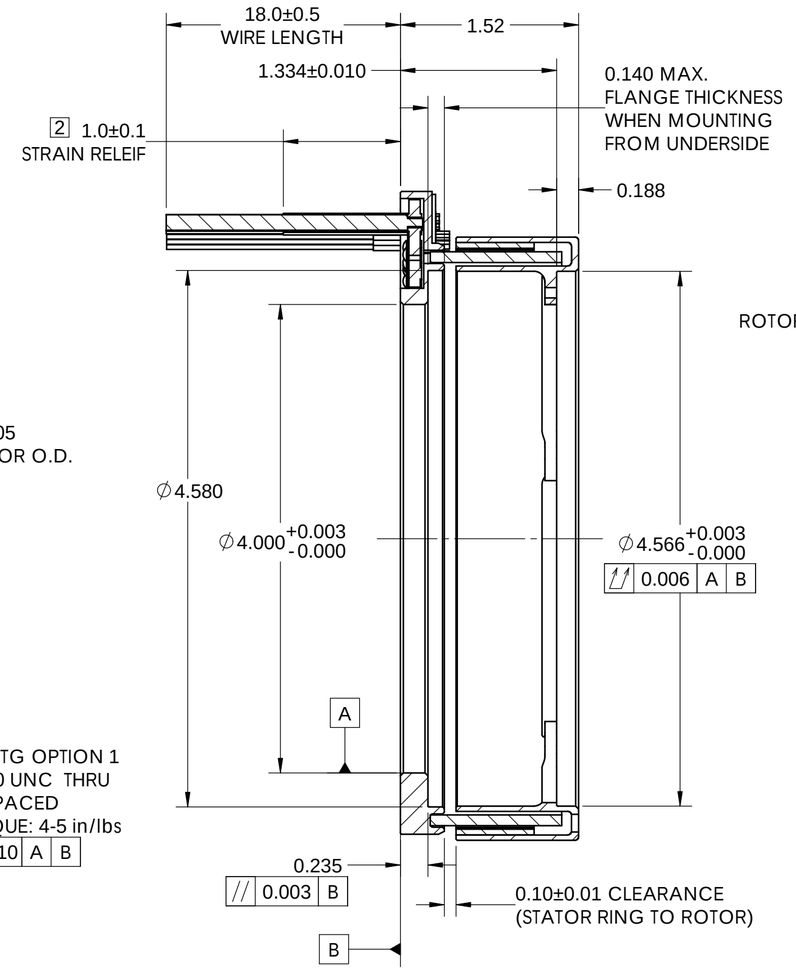

SECTION A-A

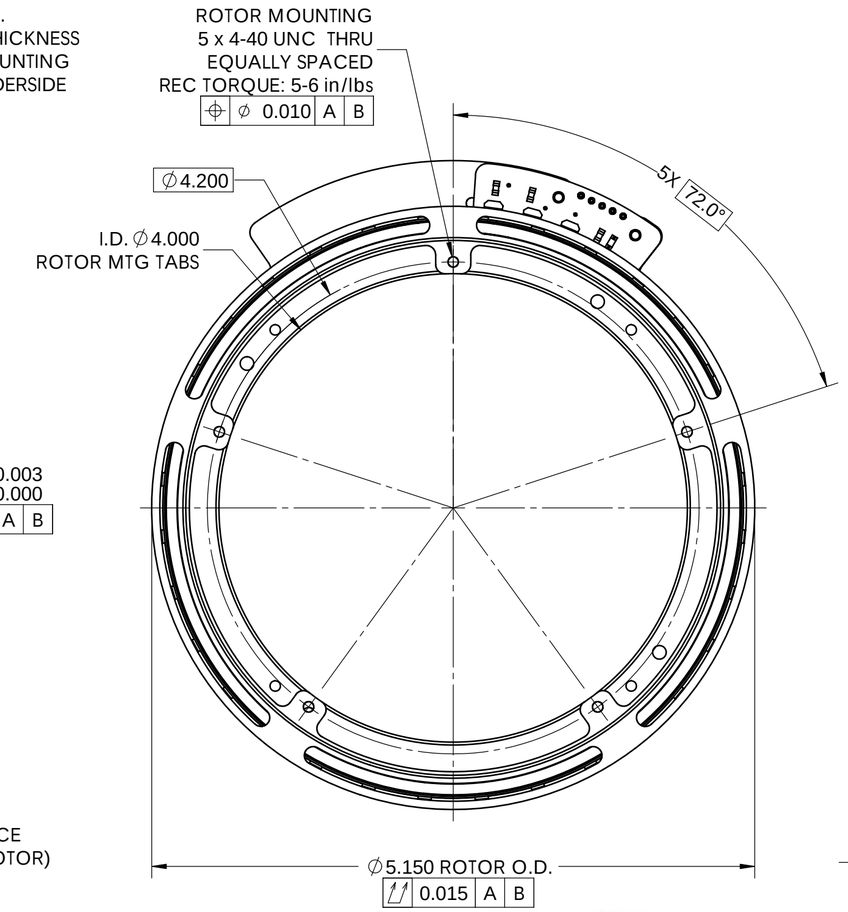

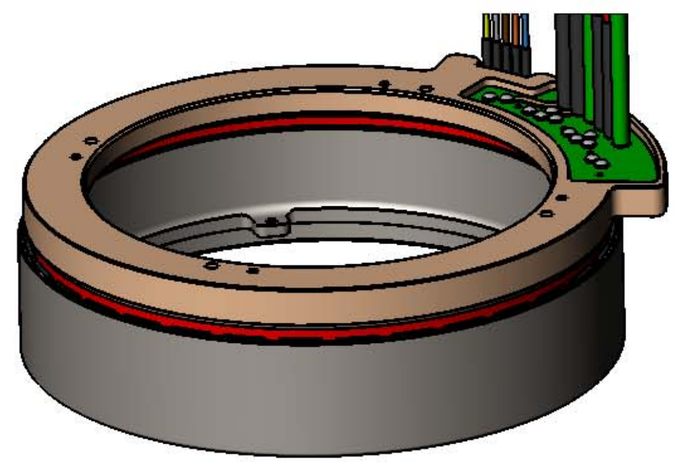

MOTOR EXCITATION

PHASE	EXCITATION STEP 1	2	3	4	5	6	1
A	+		–	–		+	+
B		+	+		–	–	
C	–	–		+	+		–

POWER CONNECTIONS 1

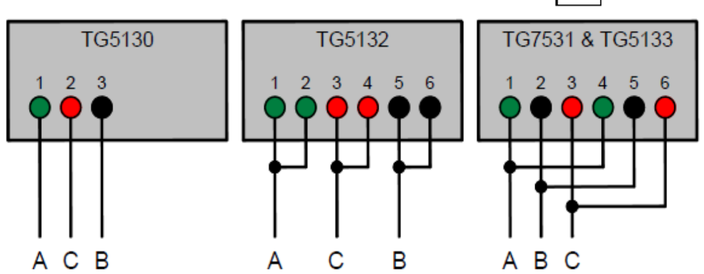

NOTES:

1. POWER CONNECTIONS SHALL BE DONE IN ACCORDANCE TO THE DIAGRAMS SHOWN ON THIS PRINT.
2. PHASE LEAD WIRES EXIT STRAIGHT FROM THE PCB. FOR OPTIONAL RIGHT ANGLE EXIT, A MINIMUM CLEARANCE IS REQUIRED TO ACCOUNT FOR WIRE BEND RADIUS/STRAIN RELEIF.

Hall Sensor Lead Identification

Lead #	Color	Description
1	YEL	V+
2	GRY	COM -
3	BRN	HALL A
4	ORN	HALL B
5	BLU	HALL C

TG5130 Phase Lead Identification

Lead #	Color	Description
1	GREEN	PHASE A
2	RED	PHASE C
3	BLACK	PHASE B

TG5132 Phase Lead Identification

Lead #	Color	Description
1 & 2	GREEN	PHASE A
3 & 4	RED	PHASE C
5 & 6	BLACK	PHASE B

TG5131 & TG5133 Phase Lead Identification

Lead #	Color	Description
1 & 4	GREEN	PHASE A
2 & 5	BLACK	PHASE B
3 & 6	RED	PHASE C

Product Identification TG513X PART SET

Item #	Description
TG5130-P010	PART SET, WYE SERIES
TG5131-P010	PART SET, DELTA SERIES
TG5132-P010	PART SET, WYE PARALLEL
TG5133-P010	PART SET, DELTA PARALLEL

DRAWING PROJECTION

	NAME	DATE
DRAWN	CS	20 MAR 16
CHECKED	DH	20 MAR 16
APPROVAL	EF	25 MAR 16

UNLESS OTHERWISE SPECIFIED, ALL DIMENSIONS ARE IN INCHES

TOLERANCES:
LINEAR: .X ±0.020 .XX ±0.010 .XXX ±0.005
ANGLES: ±0.1°

ThinGap
www.thingap.com

TOP ASSEMBLY, PART SET

ITEM# TG513X-P010

REV A

COPYRIGHT © 2015 BY THINGAP

APPROX WEIGHT 1.0 lbs